VACUUM PUMP

LINEAR

Compressor Vacuum

MOTOR FREE
PISTON SYSTEM

VP0140

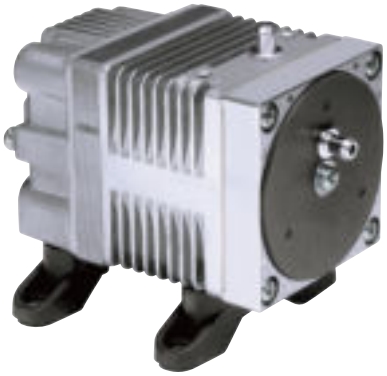

Airflow & Power Consumption

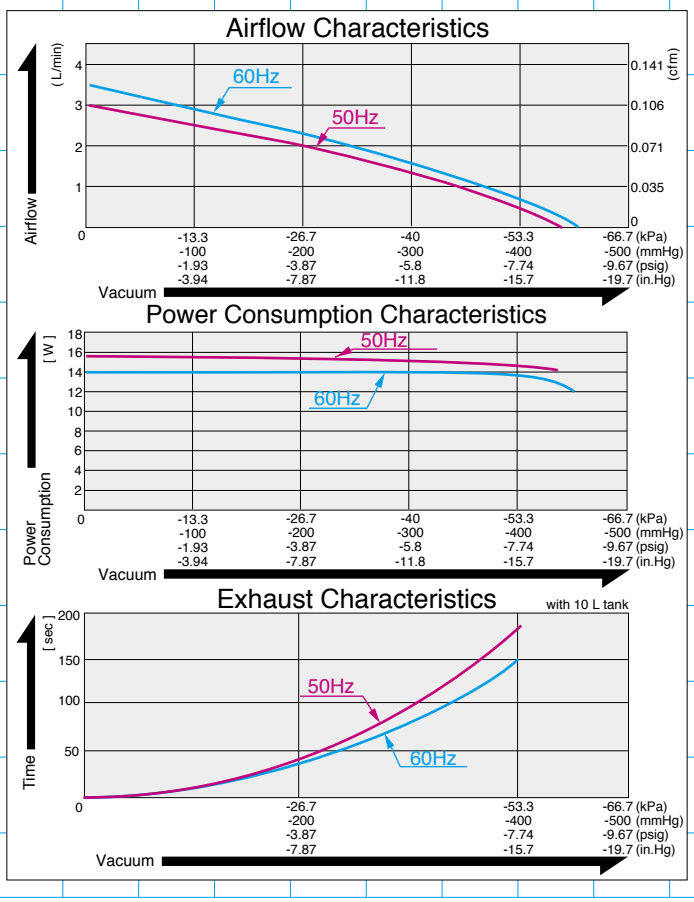

Specifications

	(SI)	(EURO)	(U.S.A.)
Attainable Vacuum※1	-53.3 kPa {-400 mmHg}	-533 mbar	-15.7 in.Hg
Free Air Displacement	3 L/min		0.106 cfm
Rated Voltage	115 V AC or 230 V AC		
Power Consumption	14 W or 15 W		
Rated Frequency	60 Hz or 50 Hz		
Life Expectancy	3,000 hours		
Inlet	6 mm O.D. hose nipple		
Outlet	6 mm O.D. hose nipple		
Duty Cycle	60 minutes		
Coil Insulation Class	E or its equivalent (JETL) and B for UL		
Mounting Dimensions	48 (L) x 62 (W) mm		1-7/8"(L) x 2-7/16"(W)
Gross Weight	0.7 kg		1.54 Lbs.
Leadwire Length	200 mm		7-7/8"

※1: Operations at higher than -53.5kPa need an additional leak valve or relief valve on the inlet piping.
Please read the page of "How to Use This Catalog" first for correct use of compressors and pumps.

Application Examples

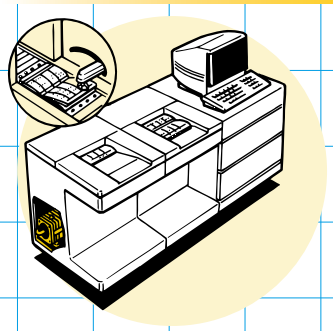

Page Scroller

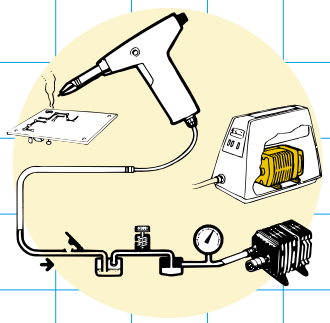

Solder Fume Suction
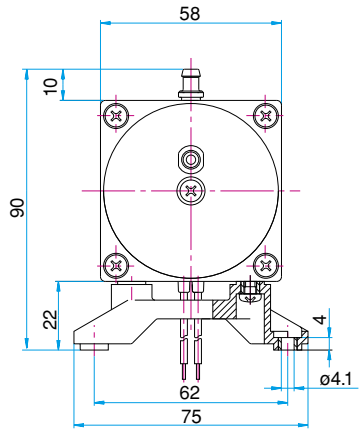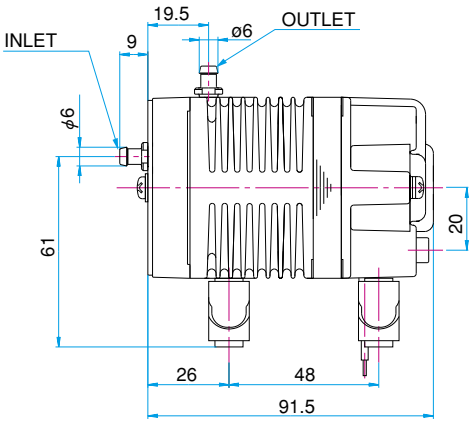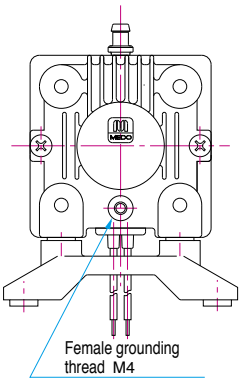
Sketch Drawing and Mounting Dimensions Diagram (mm)